SUSPENSION, FRONT SHOCK MOUNTING - Z26SPD92AN/AH/BN/BH (C750872)

2026 RZR - RZR PRO S ULTIMATE (R01) - Z26SPD92AN/AH/BN/BH

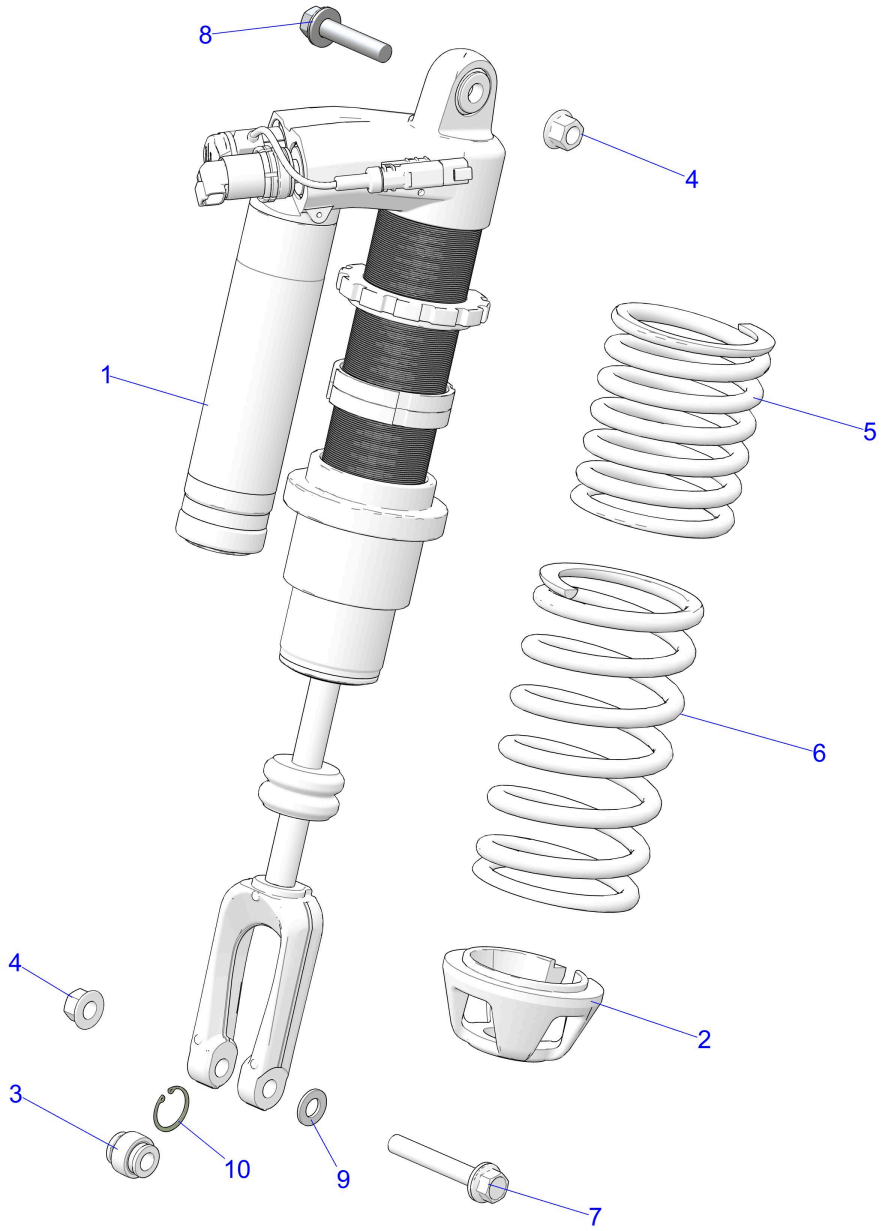

© 2025 Polaris Industries Inc.

C750872

Reference #	Part#	Description	Quantity
1	7046340	SHOCK-FRONT,DX,LH	1
1	7046341	SHOCK-FRONT,DX,RH	1
2	5639841	RETAINER-SPRING,CAST	1
3	7082662	BEARING-SPHERICAL,M14,30X32	1
4	7547981	NUT-HXFL-M14X2X 10 ZFB SPC	2
5	7045651-737	SPR-200# 8.9FL 3.79-ID,S.BLUE [INDIAN SKY BLUE][AN/BN]	2
5	7045651-458	SPR-200# 8.9FL 3.79-ID,M.BLK MATTE BLACK][AH/BH]	2
6	7045639-737	SPR-300# 12.8FL 3.79-ID,S.BLUE [INDIAN SKY BLUE][AN/BN]	2
6	7045639-458	SPR-300# 12.8FL 3.79-ID,MBLK MATTE BLACK][AH/BH]	2
7	7521335-95	SCR-HXFL-M14X2.0X95 10.9 ZFB	2

8	7521335-65	SCR-HXFL-M14X2.0X65 10.9 ZFB	2
9	7557195	WSHR-15X28X2.5 ZPB	2
10	7710539	RING-RETAINING,1.25 ID HSNG	1

Copyright 1996-2026 Polaris Industries U.S.A All rights reserved.